

High-compression mill **MDGM Gen2**

Innovations for a **better world.**

BÜHLER

Discover the future of **whole-grain milling**

Whole-grain flour markets are transforming rapidly, as consumers, food producers, and policymakers place increasing emphasis on nutrition, food safety, product consistency, and resource efficiency.

High-compression milling revolutionizes the production of whole-grain flour. In this process, whole grain is ground under high pressure and additional shear force, generating controlled heat that enhances the flour's flavor, softness, texture, and while fully retaining the fiber, bran, germ, and complete nutrition intact in whole-grain flour.

The High-compression mill MDGM Gen2 processes a wide range of nutritious alternative grains, giving millers greater flexibility, improved asset utilization, and access to growing markets for healthier, more diverse food products.


Soft wheat


Semi-hard wheat


Hard wheat


Canadian durum wheat


Australian wheat


Ukrainian wheat


Sorghum


Finger millet


Pearl millet

High-compression mill
MDGM Gen2

Bühler's new High-compression mill MDGM Gen2 is a compact grinding solution designed for the production of homogeneous, premium whole-grain flour, combining precise product control with the authentic taste, texture, and nutritional value expected from traditional whole-grain flour.

Benefits

- Maximum yield
- Reduced operating costs up to 30%
- Maximum food safety and hygiene
- Consistent whole-grain flour quality and flexibility
- Designed to fit seamlessly into existing and new plants

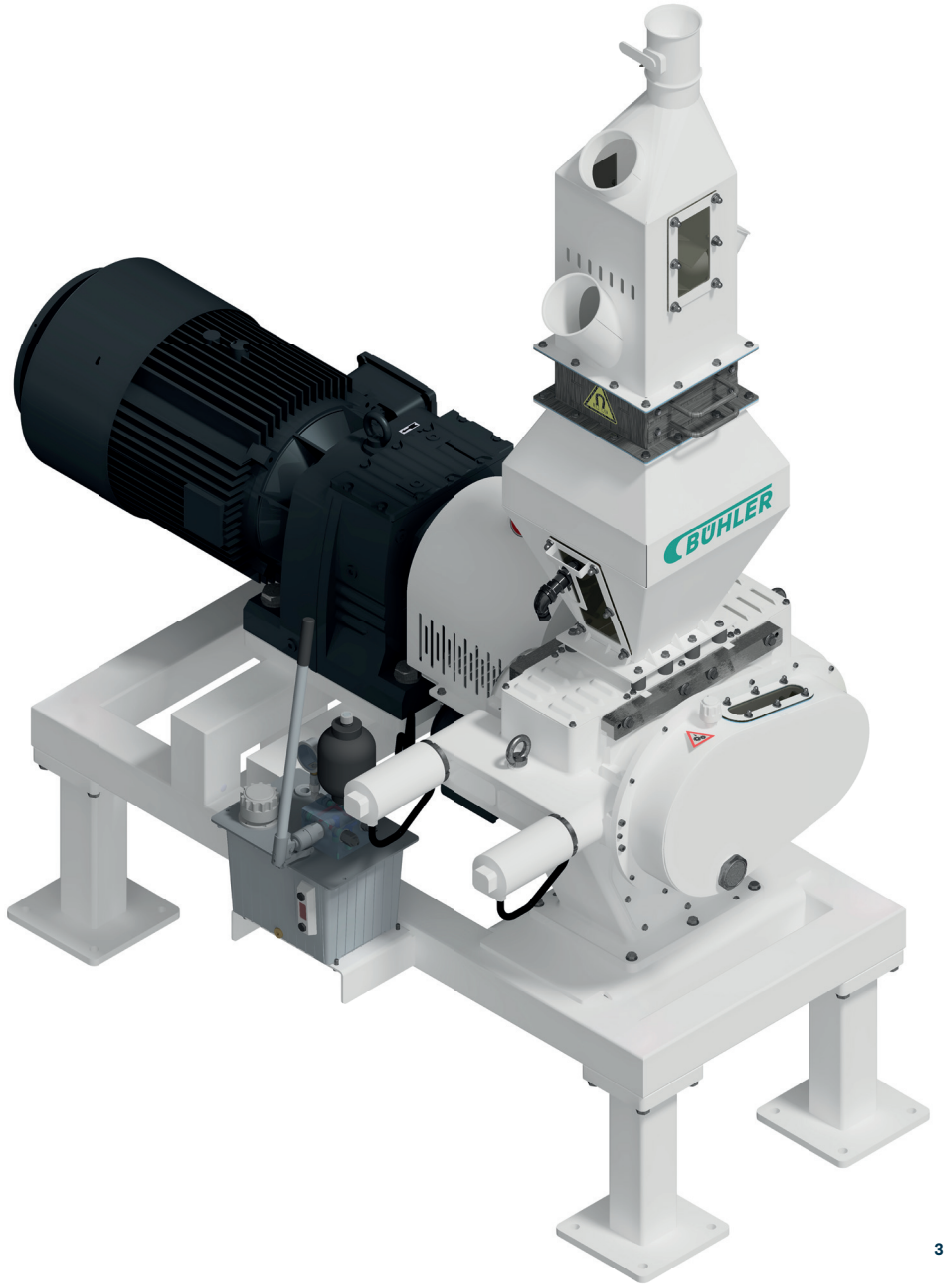

Precised grinding for **maximum yield**

The innovative differential-speed fast and slow roll technology of the MDGM Gen2 enables precise grinding by combining high-compression shear forces with an adjustable grinding gap – specifically engineered for premium whole-grain flour production.

Benefits

Maximum yield
Up to 98% recovery for superior efficiency and value

Minimal moisture loss
Reduced grinding loss for higher quality and better yield

Precise water absorption control
Optimized range of 65-80% per 100 g of flour for consistent dough performance

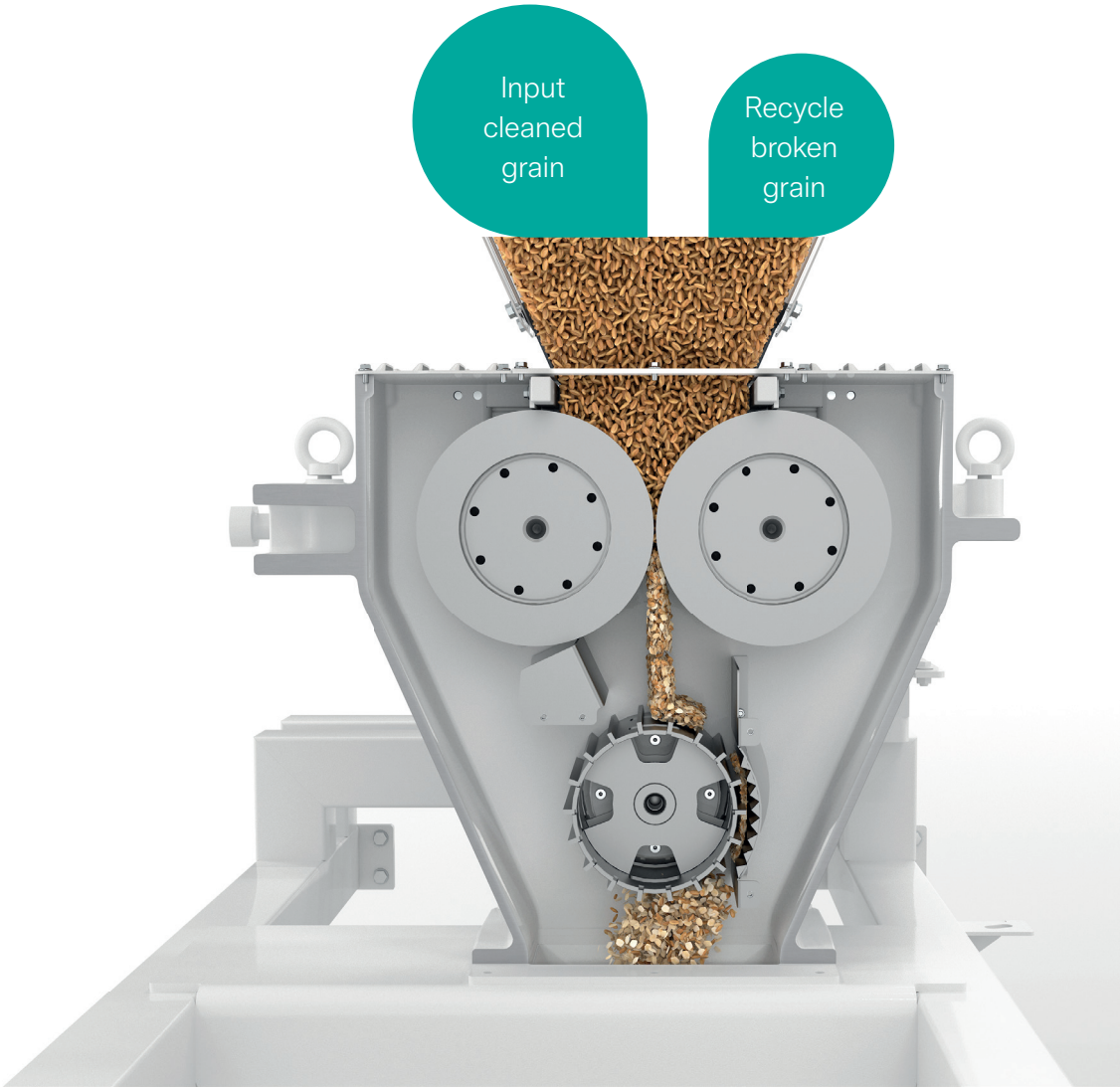

High flexibility to precisely control starch damage – tailored to water absorption

Reduced **operating costs** by 30%

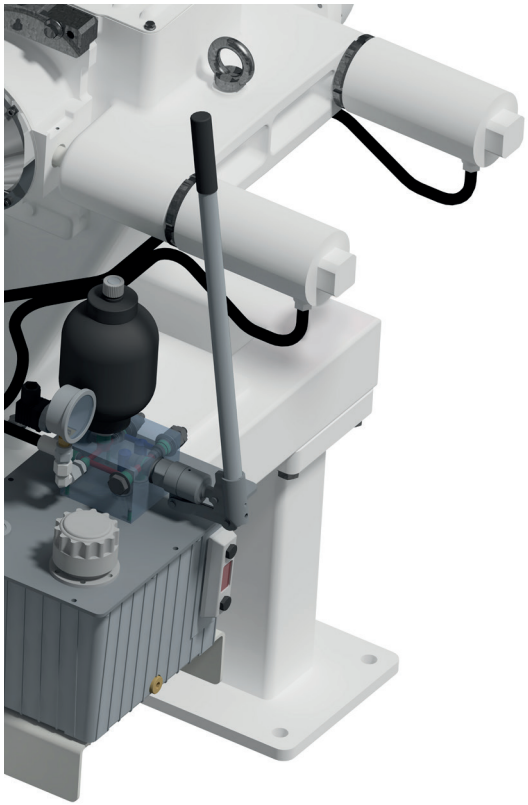

Hydraulic system maintains uniform roll gap.

The re-engineered oil lubrication system extends the life of the gear transmission, while the hydraulic system maintains a uniform roll gap. Precision-engineered, wear-resistant grinding rolls minimize downtime and deliver dependable continuous operation. The high-compression design ensures consistent product quality, batch after batch.

Benefits

- Extended grinding roller lifetime
- Long-lasting gear transmission
- Lower operating expenditure



Oil lubrication system extends life of gear transmission.

Maximum **food safety** and **hygiene**

Stone-free technology eliminates the risk of stone fragments and mineral contamination. Combined with food-safe materials and easy-to-clean components, it delivers the highest hygienic standards required in modern whole-wheat flour production.

Benefits

Consistent product quality and safety
Supports reliable flour quality through hygienic construction and controlled grinding conditions

Reduced contamination risk
Thanks to the stone-less grinding principle, ensure the whole wheat flour is free from contamination

Nutrient-preserving grinding
Slow grinding technology retains essential micronutrients in the flour

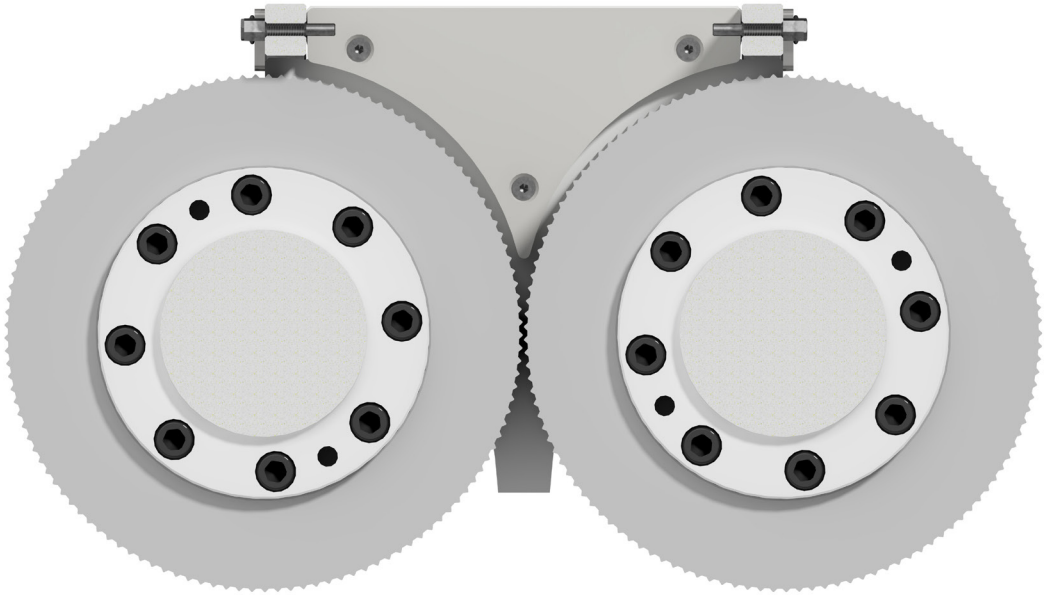

Stone-free technology eliminating the risk for contamination.

Consistent **flour quality** and **flexibility**

The flexible single-stage or two-stage high-compression grinding system produces homogeneous, high-quality whole-grain flour with controlled quality parameters, optimized water absorption, and adjustable starch damage – supporting consistent dough performance across different wheat varieties and end-product requirements.

Benefits

Optimized water absorption
Adjustable for consistent dough performance across grain types and regions

Adjustable starch damage
Flexible range to fine-tune whole-grain flour functionality

Flexible granulation
Enables coarse, medium, or fine flour to match regional needs in a range of 55–75% per 100g

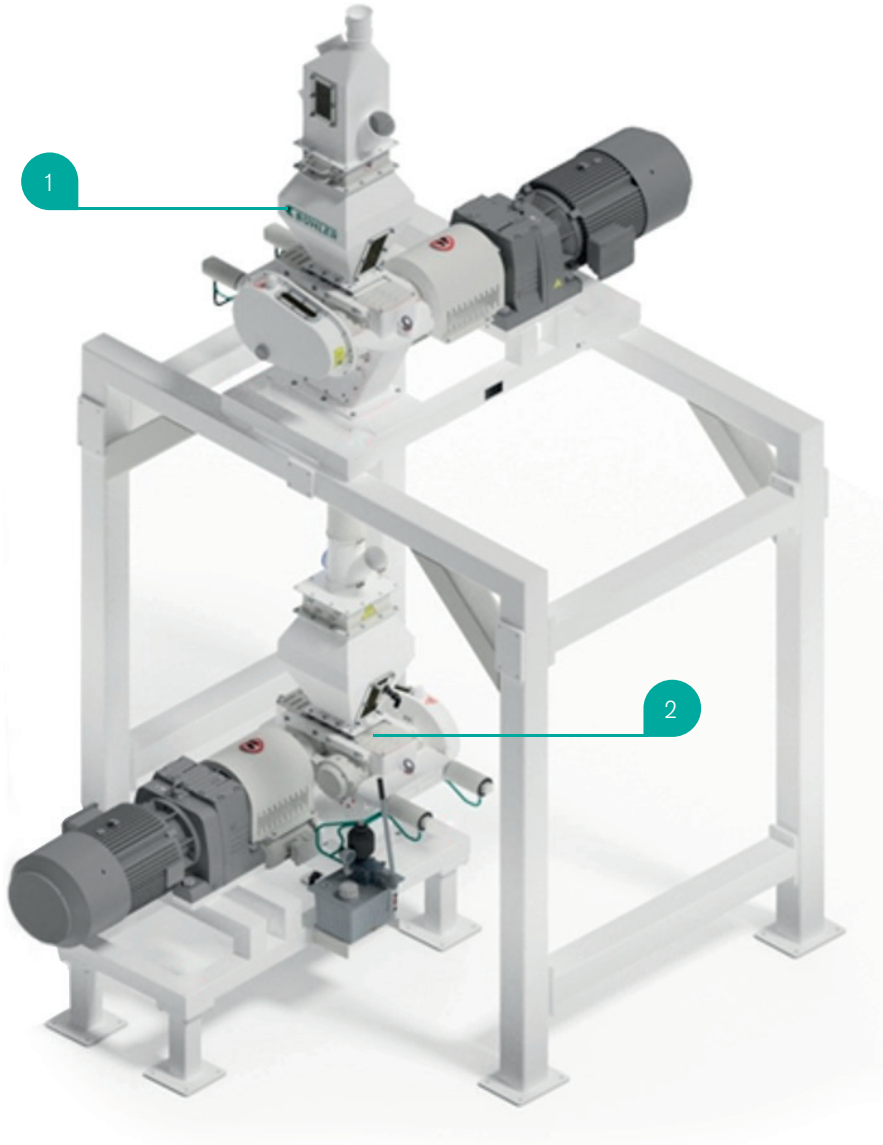

Dual-grinding system (2 x MDGM Gen2) for authentic taste at industrial scale and reliability.

Compact footprint for maximum milling flexibility

The High-compression mill MDGM Gen2 can be can be easily integrated into existing facilities or engineered into new milling plants.



Benefits

Space-saving design
Requires a physical floor area of only 2.28 m^2

Flexible capacity
Available for production requirements of 15, 24 or 48 tonnes per day

Flexible installation
Suitable for installation in existing production or warehouse areas, subject to engineering verification

Technical data

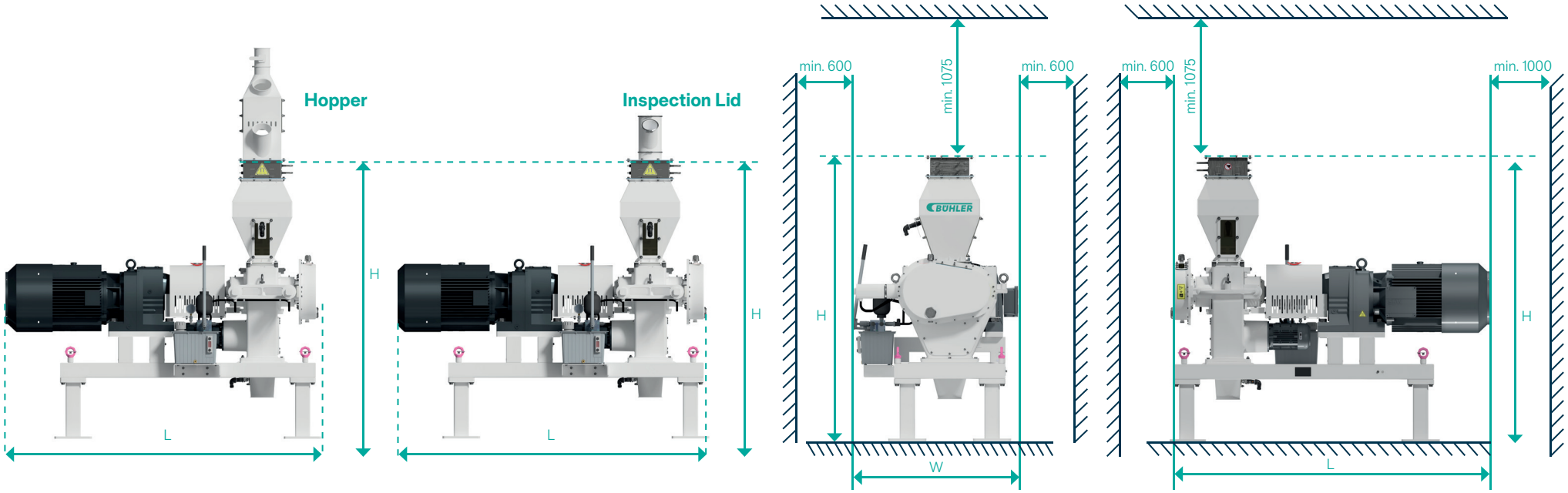

Type	Weight	Dimension	Motors	Aspiration	Motor details		Differential roller speed ratio		Machine footprint	Volume
	(kg)	W x L x H (mm)	Description	(m^3/min)	kW	(Nm)	Std.	Opt.	m^2	m^3
MDGM (stand-alone)	1370	1100 x 2068 x 1857	Geared motor	-	45	2180	1:17	1:14	2.28	4.24
			Detacher		1.5	-	-	-		
Hopper	18	317 x 516 x 748	-	10 m^3/min	-	-	-	-	-	-
Inspection Lid - H2	5	317 x 317 x 300	-	10 m^3/min	-	-	-	-	-	-



Bühler AG

Milling Solutions
CH-9240 Uzwil
Switzerland

buhlergroup.com
milling@buhlergroup.com

Brochure MDGM Gen2 en 0826 Z&B en 262976