

Whitepaper

High-compression milling for whole-grain flour

Innovations for a **better world.**

BÜHLER

Innovation in whole-grain milling

Wheat remains one of the most important food commodities globally, with annual production exceeding 800 million tons[1]. While the overwhelming majority of the global wheat harvest is consumed as white flour, demand for whole-grain flour is increasing, driven by its role in regional cuisines, its nutritional value, and its versatility in both traditional and modern food applications. Whole-grain flour represents the original form of wheat processing, based on the simple principle of grinding the entire kernel to retain its nutritional composition. This method has remained largely unchanged for centuries and continues to underpin dietary staples across multiple regions.

Whole-grain flour markets are transforming rapidly, as consumers, food producers, and policymakers place increasing emphasis on nutrition, food safety, product consistency, and resource efficiency. From a nutritional standpoint, whole-grain flour offers some advantages over refined flour alternatives. It contains higher concentrations of B vitamins and minerals such as iron. It also contains more dietary fiber, which is widely recognized as an important component of a balanced diet. Depending on formulation and processing conditions, whole-grain flours can also influence physiological responses to the product, including carbohydrate digestion and glycemic response. As global consumers increasingly prioritize health and wellness, these attributes are shifting from being traditional benefits to becoming core drivers of demand.

The shift to industrialized whole-grain flour

India, the world's largest whole-grain flour market, produces around 110 million tons[2] of wheat annually, with more than half consumed as flour (atta). In Pakistan, with similar market characteristics, 80% of farmers grow wheat, and the crop covers close to 40% of cultivated land. Despite the central role played by whole-grain flour in both countries, processing remains highly decentralized, with most flour produced in stone mills.

These markets are now undergoing a shift toward industrialized flour production. Demographic and economic forces, including population growth, urbanization, rising incomes, and stricter food safety regulations, are converging with changing consumer expectations around hygiene, safety, and brand reliability to drive this change.

Regional drivers of whole-grain flour

Elsewhere, replacing consumption of white flour with whole-grain flour is playing a key role in efforts to improve nutrition standards and promote population health.

- **China's** National Whole Grain Action Plan aims to promote whole-grain consumption, reduce food waste, and improve national food security.[3]
- In **North America**, dietary guidelines and industry-wide whole-grain initiatives are driving strong demand for flours rich in fiber and micronutrients. Consumers increasingly seek clean-label, health-forward products that deliver proven nutritional benefits without compromising taste or texture.[4]
- **European** markets are prioritizing flours that support public health goals around fiber intake and micronutrient density.[5]
- Across **Africa**, the shift toward whole grain and more nutritious cereal-based foods is increasingly linked to three major priorities: better public health, stronger food security, and greater use of locally relevant grain solutions. Many African countries are moving in a similar direction through nutrition strategies, school feeding programs, food fortification frameworks, and innovation in healthier bakery and staple products.[6]

Enabling product innovation

Around the world, whole-grain flour applications are expanding beyond traditional flatbreads into a diverse range of products, including biscuits, breads, pasta, cookies, and ready-to-eat foods — reinforcing its role as a premium health-oriented ingredient and supporting sustained market growth.

Structural limitations of traditional milling technologies

Despite strong demand fundamentals, the traditional process used to produce whole-grain flour has remained largely unchanged, resulting in persistent operational and quality constraints.

- **Horizontal/Vertical Emery stone mills** have long played an important role in traditional whole-grain flour production. They can present challenges for modern industrial operations, however, including particle size control, stone wear (which may increase contamination risk), hygiene management, the need for frequent, labor-intensive maintenance, and poor energy efficiency. These limitations undermine food safety, nutrient retention, operational efficiency, and the ability to meet modern hygiene standards.
- **Hammer mills** are effective for general size reduction, but they carry two key limitations: high energy consumption and an inability to produce consistent particle-size distribution control, since granulation cannot be precisely controlled. These constraints can limit their suitability for premium, finely milled whole-grain flour.[7]
- **Roller milling technology** is highly effective for precise fractionation, making it a preferred approach for white, refined and specialty flours. In whole grain milling, however, conventional roller mills may not grind bran to suitably fine particles or achieve the starch damage required to increase water absorption by the flour. These challenges can lead to suboptimal flour functionality, affecting dough performance, texture, and overall flour quality.

An innovative approach to an age-old challenge

Recognizing the industry's needs, Bühler pioneered high-compression milling in the early 2010s — a revolutionary grinding principle using special hard steel rolls. The technique combines powerful shear and compression forces with precise control, enabling efficient particle size reduction while eliminating contamination risks associated with stone wear, reducing maintenance, and helping retain the nutritional composition of whole-grain flour through controlled, low-temperature processing.

High-compression milling of whole grain results in ~98% extraction rates, together with controlled starch damage that can support desirable flatbread softness and eating quality with better water absorption. The technology uses 10% less energy per ton than traditional stone milling, and the solution is fully automated for consistent output, Furthermore, grinding bran, endosperm, and germ homogenously leads to improved flour quality stability.

Bühler first scaled this technology with the PesaMill™ in 2013 for large operations, replacing up to 20 typical industrial horizontal stone mills and dramatically reducing footprint and complexity.

In 2019, the compact AIPesa™ brought these benefits to smaller and mid-sized millers with a plug-and-play, 15 ton-per-day system. A significant share of packaged and branded premium whole-grain flour in India, Pakistan, Africa, and the Middle East is now produced by Bühler's high-compression milling technology. Similar success is spreading globally, with millers praising lower costs, higher automation, consistent quality, and superior product appeal.

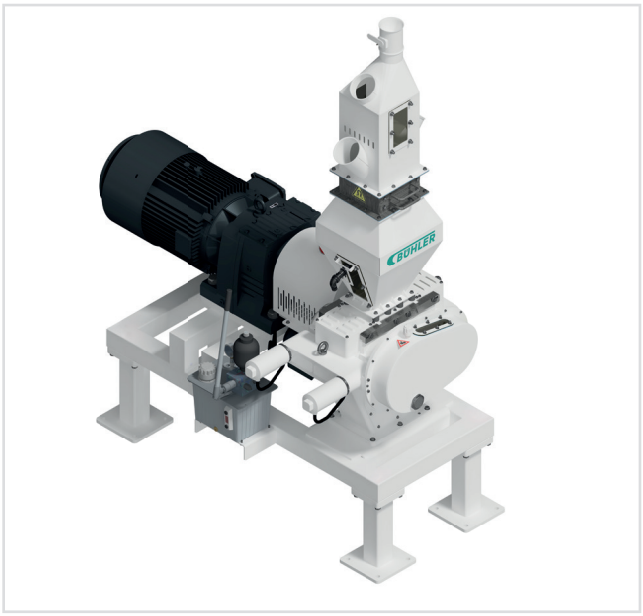

High Compression Mill MDGM Gen2 - a compact grinding solution for premium whole-grain flour.

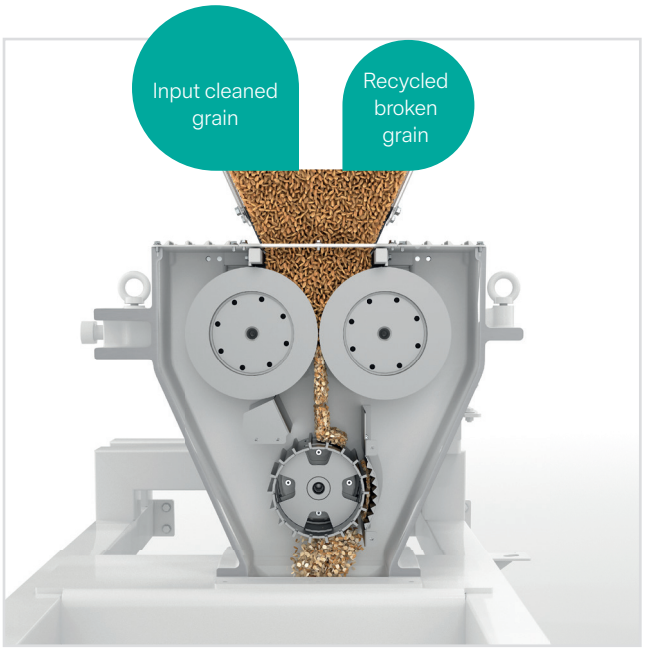

Advanced differential roll technology enabling precise grinding.

Advancing the platform

As the whole-grain market continues to evolve, so do the demands of millers. Building on four years of intensive research, customer feedback and deep market insight, Bühler is launching MDGM Gen2, which is a more flexible and future-ready high-compression milling system. MDGM Gen2 includes several innovations designed to make high-compression milling more efficient, more flexible, more cost-effective, and easier to run and maintain. A new rotary break mill, type MDLS, placed before the high-compression grinding stage can pre-break wheat grains containing up to 15% moisture. That pre-breaking stage reduces the amount of work done by the main grinding stage, which increases capacity and extends roller life. Dual-stage high-compression grinding modules enable maximum output in a minimal footprint. This provides flexibility in achieving higher starch damage while retaining nutritional value and freshness of the whole grain.

The High-compression mill MDGM Gen2 includes several usability improvements. A switch from grease to oil lubrication in the gear transmission eliminates the need for regular re-greasing, and the grinding pressure adjustment is now hydraulic, replacing the mechanical bolt and spring used in its predecessor. That ensures consistent grinding pressure and is faster and easier for operators to adjust. The MDGM Gen2 offers greater capacity - up to 48 tons per day, allowing millers to produce one truckload of whole-grain flour a day, a volume that simplifies logistics and distribution planning. Another change based on customer feedback is the option to purchase MDGM Gen2 in either a standard or an engineered solution, in which components can be laid out and configured to suit individual customer needs. That makes it easier for mill owners to incorporate the new equipment into existing facilities.

Beyond wheat

High-compression milling technology can also be used to process alternative grains such as sorghum, finger millet and pearl millet. Many of these grains offer high levels of dietary fiber, vitamins, and antioxidants, aligning with broader consumer trends toward healthier and more diverse food options.

For millers, this capability introduces new degrees of operational flexibility and market access. The ability to switch between grain types with minimal reconfiguration improves asset utilization and enables participation in emerging product categories.

The dual-grinding system of MDGM Gen2 is suitable for authentic flours for chapati and roti, as well as for pita/kobuz, aish baladi, markouk, swallow (tuwo masara), sorghum cookies, and other staple foods that support communal eating and cultural connection.

Bühler milling specialists in its application centers around the world are working with customers to explore the use of MDGM Gen2 in the production of whole-grain flours from a wide range of modern crop varieties and traditional grains.



Versatile grains. Consistent outcomes.

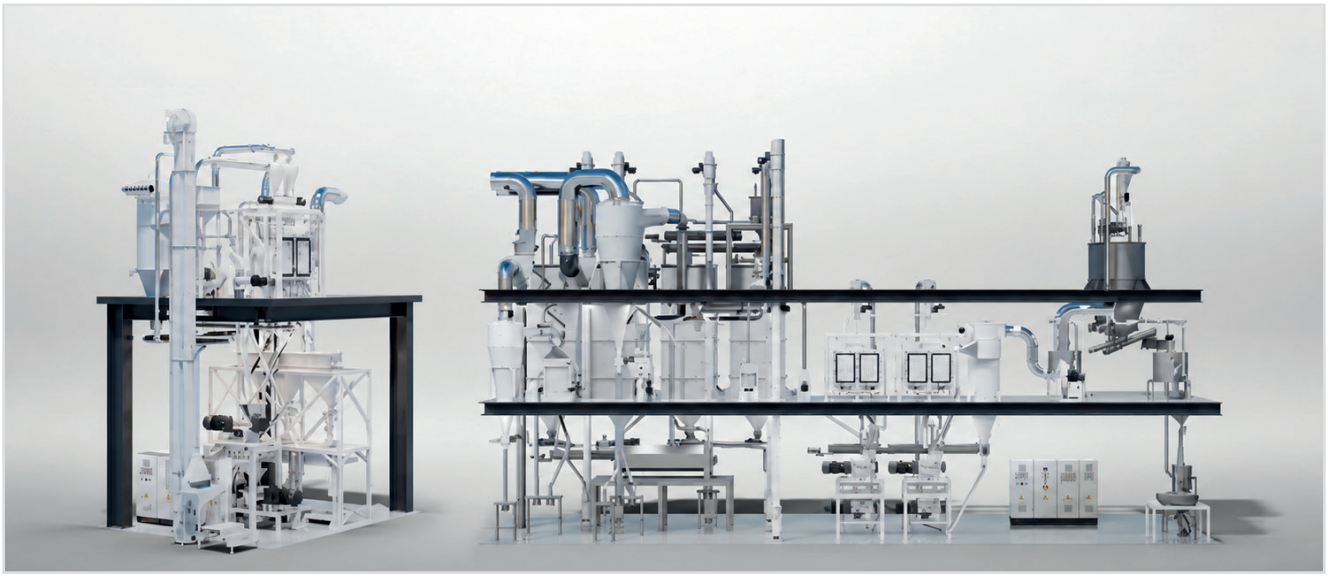

MDGM Gen2 as standard or engineered solution for capacities up to 48 tons per day.

Next-gen Milling

The evolution of whole-grain milling reflects a broader shift across food systems, where legacy processes may not meet modern expectations for quality, safety, and scalability. High-compression milling offers a compelling alternative, bridging the gap between traditional product characteristics and industrial performance requirements. Early adopters are already realizing gains in yield, efficiency, and product consistency, while also positioning themselves to capture growth in adjacent categories.

See how innovative solutions can enhance quality, consistency, and efficiency.

More information on whole-grain milling needed?
Contact us:
milling@buhlergroup.com



Nandan Rao R
Product Manager

[1] https://ourworldindata.org/grapher/wheat-production?tab=table&time=2024

[2] https://www.statista.com/topics/10536/wheat-market-in-india/?srsltid=AfmBOoqEDmEk9ugibOx5QYOG1lrWC2-BQWzX5scTqTTPZOhcbz5v8g34#topicOverview

[3] https://www.chinadaily.com.cn/a/202501/22/WS67904107a310a2ab06ea86fe.html

[4] https://www.wholegraininitiative.org/

[5] https://www.futuremarketinsights.com/reports/europe-whole-grain-and-high-fiber-foods-market

[6] https://fwg-alliance.org/rwanda-fortified-whole-grains-enhance-nutrition-security-in-schools/

[7] https://pmc.ncbi.nlm.nih.gov/articles/PMC7709460/



Bühler AG

Milling Solutions
CH-9240 Uzwil
Switzerland

buhlergroup.com
milling@buhlergroup.com

BUZ MS MDGM Gen2 Whitepaper EN 0726 Z&B 262480